صاف
SAF
sudair
سدير

الجودة في كُل صنّعة

SAUDI MADE

صاف
SAF
sudair
سدير

نبذة عنا

صاف سدير، بوابة التميز الصناعي في السعودية. نحن لا نقدم مجرد منتجات، بل نصنع أعمالًا تجمع بين الدقة التقنية والتميز. بفخر نقدم تشكيلة منتجاتنا المميزة التي تجسد التفاني في الجودة والابتكار، داعمين بذلك الصناعة المحلية ومساهمين في رسم مستقبل مشرق للتصنيع في المملكة العربية السعودية

الرؤية

أن نكون الرائدون في قطاع الصناعة بالمملكة العربية السعودية من خلال تقديم حلول صناعية متقدمة ومبتكرة تعزز الاقتصاد المحلي وتسهم في التنمية المستدامة

الرسالة

نسعى نحن في صاف سدير، لتقديم منتجات صناعية بجودة عالية وأداء متميز مع التزامنا القوي بالابتكار والتطوير والتميز التقني حيث نهدف إلى تعزيز الصناعة المحلية بمنتجات تحمل مواصفات عالية الجودة لتزدهر المملكة العربية السعودية بصناعاتها.

ونسعى أيضًا لتحقيق شراكات استراتيجية تسهم في رفع مستوى التطور والابتكار في السوق السعودي والعالمي

أنابيب لأنظمة مياه الشرب

PE PIPES FOR WATER SUPPLY

PE 100 PIPES FOR WATER SUPPLY ACCORDING TO ISO4427-2

		SDR 26	SDR 17	SDR 13.6	SDR 11	SDR 9
		S 12.5	S 8	S 6.3	S 5	S 4
	Nominal pressure (PN)					
PE 80	PN 3.2	PN 5	PN 8	PN 10	PN 12.5	PN 16
PE 100	PN 4	PN 6	PN 10	PN 12.5	PN 16	PN 20
Nominal Outside	Wall thickness	Wall thickness	Wall thickness	Wall thickness	Wall thickness	Wall thickness
16	-	-	-	-	-	2.0
20	-	-	-	-	2.0	2.3
25	-	-	-	2.0	2.3	3.0
32	-	-	2.0	2.4	3.0	3.6
40	-	-	2.4	3.0	3.7	4.5
50	-	2.0	3.0	3.7	4.6	5.6
63	-	2.5	3.8	4.7	5.8	7.1
75	-	2.9	4.5	5.6	6.8	8.4
90	-	3.5	5.4	6.7	8.2	10.1
110	-	4.2	6.6	8.1	10.0	12.3
125	-	4.8	7.4	9.2	11.4	14.0
140	-	5.4	8.3	10.3	12.7	15.7
160	-	6.2	9.5	11.8	14.6	17.9
180	-	6.9	10.7	13.3	16.4	20.1
200	-	7.7	11.9	14.7	18.2	22.4
225	-	8.6	13.4	16.6	20.5	25.2
250	-	9.6	14.8	18.4	22.7	27.9
280	-	10.7	16.6	20.6	25.4	31.3
315	7.7	12.1	18.7	23.2	28.6	35.2
355	3.5	13.6	21.1	26.1	32.2	39.7
400	9.8	15.3	23.7	29.4	36.3	44.7
450	11.0	17.2	26.7	33.1	40.9	50.3
500	12.3	19.1	29.7	36.8	45.4	55.8
560	13.7	21.4	33.2	41.2	50.8	62.5
630	15.4	24.1	37.4	46.3	57.2	70.3

PE 100 PRESSURE PIPES FOR WATER SUPPLY ACCORDING TO DIN 8074 - 8075

	SDR 41 S 20 PN 4		SDR 26 S 12.5 PN 6.3		SDR 17 S 8 PN 10		SDR 15.6 S 6.5 PN 12.5		SDR 11 S 5 PN 16		SDR 9 S 4 PN 20	
Nominal Outside Diameter (mm)	Wall thickness mm	Weight kg/m	Wall thickness mm	Weight kg/m	Wall thickness mm	Weight kg/m	Wall thickness mm	Weight kg/m	Wall thickness mm	Weight kg/m	Wall thickness mm	Weight kg/m
16	-	-	-	-	-	-	-	-	-	-	1.8	0.084
20	-	-	-	-	-	-	1.8	0.107	1.9	0.112	2.3	0.133
25	-	-	-	-	1.8	0.137	1.9	0.144	2.3	0.171	2.8	0.2
32	-	-	-	-	1.9	0.187	2.4	0.232	2.9	0.272	3.6	0.327
40	-	-	1.8	0.227	2.4	0.295	3	0.356	3.7	0.43	4.5	0.509
50	-	-	2.0	0.314	3	0.453	3.7	0.549	4.6	0.666	5.6	0.788
63	1.8	0.346	2.5	0.494	3.8	0.721	4.7	0.673	5.8	1.05	7.1	1.26
75	1.9	0.457	2.9	0.675	4.5	1.02	5.6	1.24	6.8	1.47	8.4	1.76
90	2.2	0.643	3.5	0.978	5.4	1.46	6.7	1.77	8.2	2.12	10.1	2.54
110	2.7	0.943	4.2	1.43	6.6	2.17	8.1	2.62	10.0	3.14	12.3	3.78
125	3.1	1.23	4.8	1.84	7.4	2.76	9.2	3.37	11.4	4.08	14	4.87
140	3.5	1.54	5.4	2.32	8.3	3.46	10.3	4.22	12.7	5.08	15.7	6.11
160	4.0	2	6.2	3.04	9.5	4.52	11.8	5.5	14.6	6.67	17.9	7.96
180	4.4	2.49	6.9	3.79	10.7	5.71	13.3	6.98	16.4	8.42	20.1	10.1
200	4.9	3.05	7.7	4.69	11.9	7.05	14.7	8.56	18.2	10.4	22.4	12.4
225	5.5	3.86	8.6	5.89	13.4	8.93	16.6	10.9	20.5	13.1	25.2	15.8
250	6.2	4.83	9.6	7.3	14.8	11.0	18.4	13.4	22.7	16.2	27.9	19.4
280	6.9	5.98	10.7	9.1	16.6	13.7	20.6	16.8	25.4	20.3	31.3	24.3
315	7.7	7.52	12.1	11.6	18.7	17.4	23.2	21.2	28.6	25.6	35.2	30.8

أنابيب لأنظمة الري

PE PIPES FOR IRRIGATION SYSTEMS

HDPE - MDPE - FOR IRRIGATION SYSTEM
TABLE DIMENSIONS (BACED ON DIN 8074 - 8075)

	W.P= 4 BAR		W.P= 6 BAR		W.P= 10 BAR		W.P= 16 BAR	
Nominal Outside Diameter (mm)	Wall thickness mm	Weight kg/m	Wall thickness mm	Weight kg/m	Wall thickness mm	Weight kg/m	Wall thickness mm	Weight kg/m
16	-	-	-	-	2.0	0.091	2.9	0.12
20	-	-	-	-	2.0	0.117	2.9	0.158
25	-	-	2.0	0.150	2.3	0.171	3.6	0.245
32	-	-	2.0	0.196	3.0	0.279	4.5	0.393
40	2.0	0.248	2.3	0.285	3.7	0.430	5.7	0.617
50	2.0	0.314	2.9	0.440	4.6	0.666	7.1	0.961
63	2.5	0.494	3.6	0.688	5.8	1.05	8.9	1.51
75	2.9	0.675	4.3	0.976	6.9	1.48	10.6	2.14
90	3.5	0.978	5.1	1.39	8.2	2.12	12.7	3.07
110	4.2	1.43	6.3	2.08	10.0	3.14	15.5	4.58
125	4.8	1.84	7.1	2.66	11.4	4.08	17.6	5.90
140	5.4	2.32	8.0	3.34	12.8	5.11	19.7	7.40
160	6.2	3.04	9.1	4.35	14.6	6.67	22.5	9.67
200	7.7	4.69	11.4	6.79	18.2	10.4	28.0	15.11
225	8.7	5.96	12.8	8.55	20.5	13.1	31.6	19.3
250	9.7	7.37	14.2	10.6	22.8	16.2	34.5	23.4
280	10.7	9.1	15.9	13.2	25.5	20.3	38.3	28.9
315	12.2	11.9	17.9	16.7	28.7	25.7	43.1	36.5
355	13.6	14.6	20.1	21.2	32.2	32.5	48.5	46.3
400	15.3	18.6	22.7	26.9	36.3	41.3	54.7	58.8
450	17.2	23.5	25.5	34.0	40.9	52.3	61.5	74.4
500	19.1	28.9	28.4	42.0	45.4	64.5	68.3	91.8
560	21.4	36.2	31.7	52.5	50.8	80.2	-	-
630	24.1	45.9	35.7	66.5	57.2	102	-	-

Material	:	PE 63
Minimum regulated strnegth	:	MR6.3 = 5 Mpa
Design Stress	:	os = 5.04 Mpa
Design saftety factor	:	C = 1.25 for water
Color	:	Black
Length	:	sizes from 16mm to 32mm are available in Coils of 300 ,200 ,100 up to 400 meters. Sizes from 40mm to 125mm are available in colls of 100 meters. Larger diamerters are avialable in straight length of 12 meters. Differences lengths can be supplied based on request.

لي مكيف صحراوي
HOSE PIPE

SIZE	LENGHT
6 MM	20 Yards
8 MM	25 Yards
10 MM	25/50 Meters
16 MM	25/50 Meters
25 MM	25/50 Meters

Rules for pipe installation are stated in DIN 19630, DIN 4033, DIN 18300 and EN 1610 standards. Pipes may be lowered to the canal after being welded outside the canal. Keeping canal excavation narrow is the important matter in here.

- Pipes must not be crushed in no matter.
- Usage of pipes damaged during stocking or transportation (damaged by sharp tools or material like stone) must be strictly avoided.

- There must not be any accumulation of subterranean water or rain water in the canal (In case of presence of water in canal, it must be discharged by pumps).

- Non-sticking sand, pebble, mixed sand with mixed grain and pebble are suitable for use as filling material. (DIN 19630 standard)

- Canal depth must be of minimum 70-80 cm.
- If the excavation soil is suitable for filling, pipe may be laid on buttom of canal

without need for bedding. If the excavation soil is not suitable (stony, moist, etc) for filling, canal depth must be increased and bedding with dry filling material(e.g. sand) must be applied.

- Thickness of bedding to be done must be minimum Al = 100 mm +1/10 DN. Bedding material must be compressed with a lightly working compactor until a 95 % endurance is obtained.

- Pipe side fillings A2, must be poured at 30 cm wigth and must be compressed with a compactor at a rate of 92-95 %. This process must be continued in every 30 cm until exceeds pipe for 30 cm.

- After pipe is passed for A3 = 30cm, filling process must be completed by compressing with a mid power compactor.

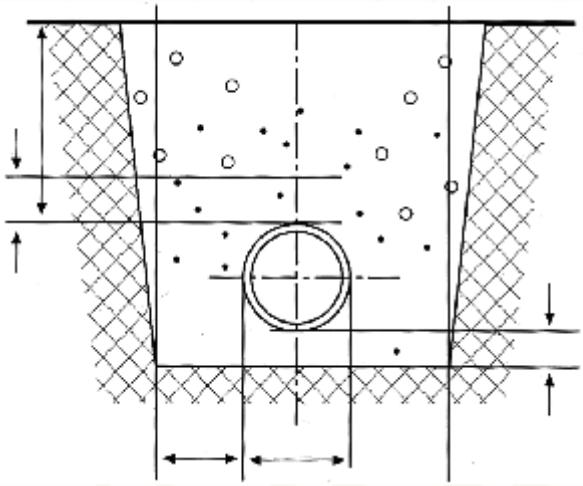

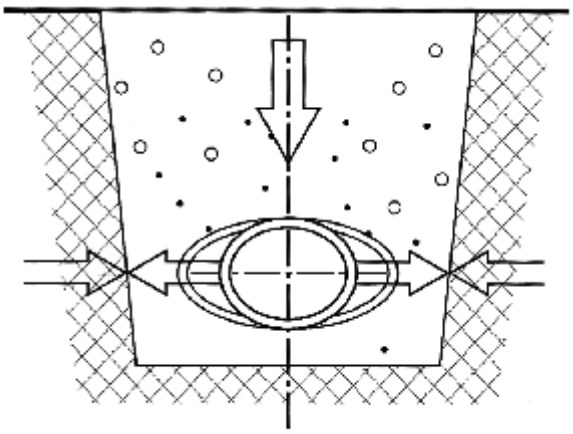

DIAGRAM SHOWING PLACEMENT OF PIPE IN CANAL

أنابيب الكهرباء

ELECTRICAL PIPES

HDPE ELECTRICAL DUCT

Nominal Outside Diameter (mm)	Minimal Wall Thickness (mm)	ID (mm)	SDR	Color	Length
50	3	44	17	Black with 3-4 Green strips	-

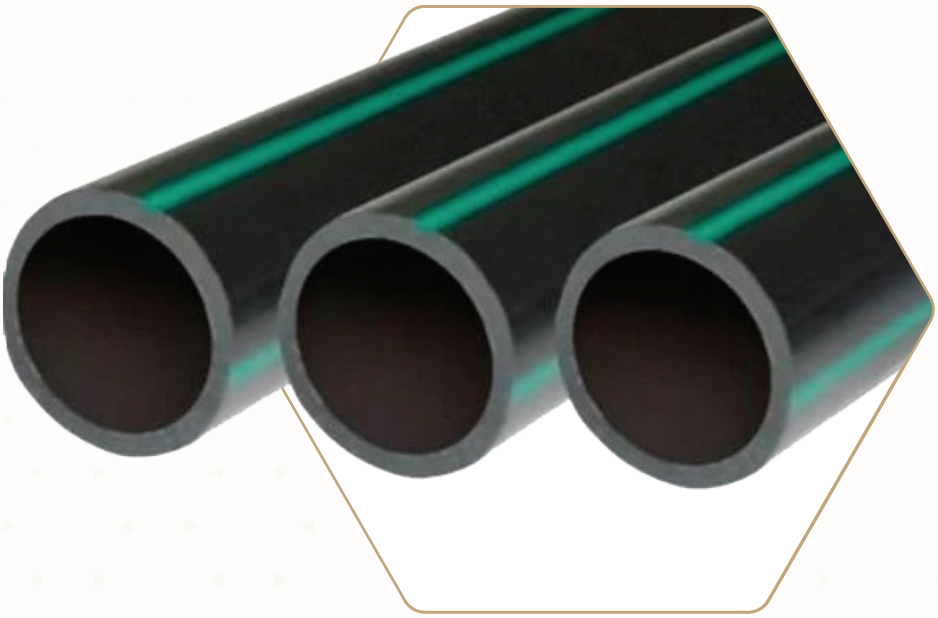

Material : HDPE

Length : Different lengths can be supplied on request

HDPE ELECTRICAL DUCT

SIZE	W.T(MM)	SDR	Color	Length (MTR)
110 MM	6.6	17	As Required	As Required
50 MM	3.0	17	As Required	As Required
32 MM	2.0	17	As Required	As Required
20 MM	1.8	10	As Required	As Required

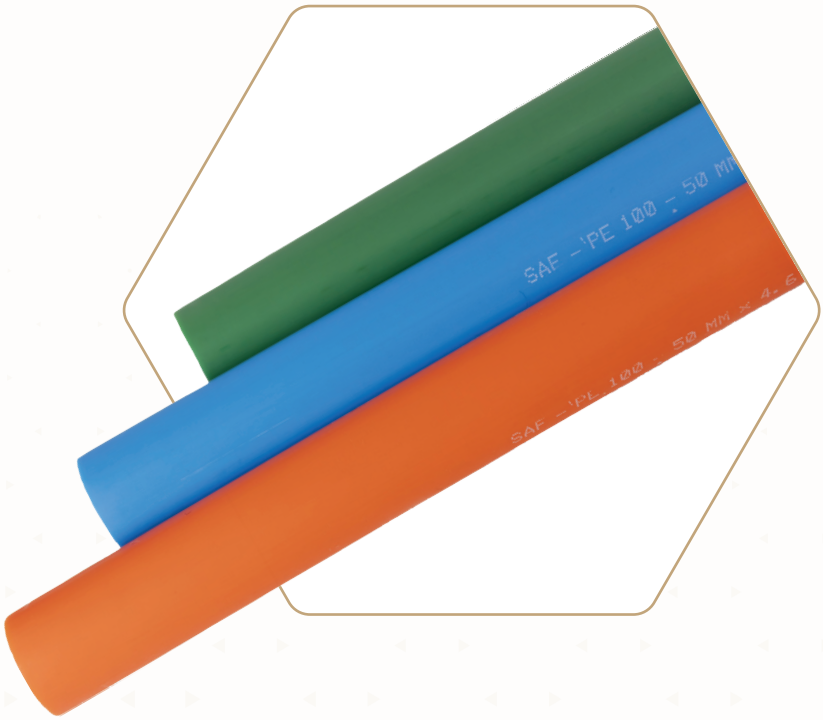

Material : HDPE

Length : Different lengths can be supplied on request

انابيب كهربائية لاعمال الإنشاءات - لي صبة
ELECTRICAL PIPES FOR CONSTRUCTION WORKS

Sizes (mm)	Thickness (mm)	Weight (kg/m)
16	1.5	0.08
16	1.9	0.1
23	2	0.12
23	2.5	0.14

أنابيب الإتصالات

TELECOMMUNICATION PIPES

HDPE TELECOMMUNICATION DUCT

Nominal Outside Diameter (mm)	Minimal Wall Thickness (mm)	ID (mm)	SDR	Color	Length
50	4,6	40,8	11	Blue	300 & 500
50	4,6	40,8	11	Orange	300 & 500
50	4,6	40,8	11	Black	300 & 500
20	1,9	16,2	11	Blue	600 & 1200
20	1,9	16,2	11	Orange	600 & 1200
20	1,9	16,2	11	Black	600 & 1200

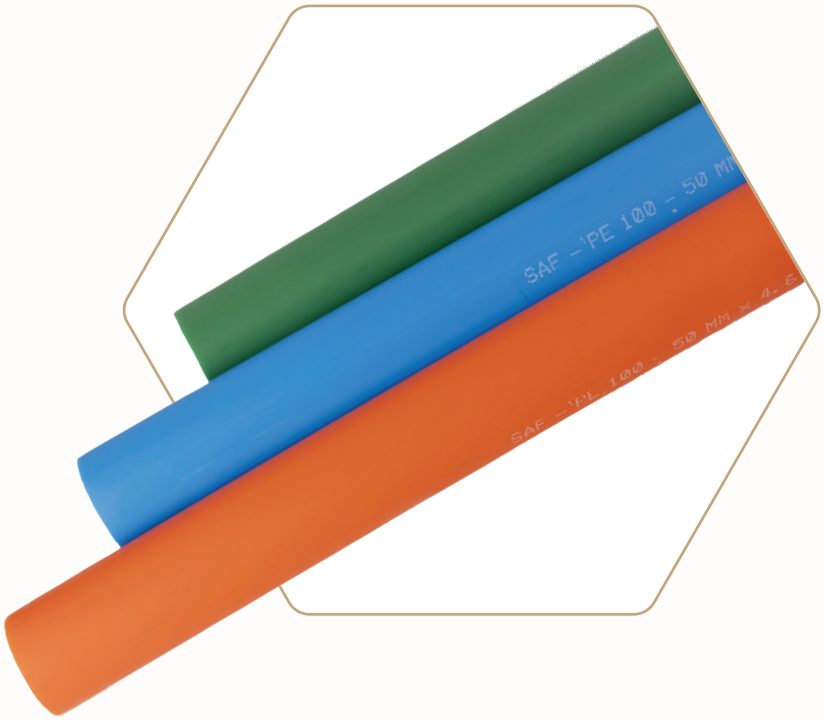

Material : HDPE

Length : Different lengths can be supplied on request

أنابيب الغاز

Gas Pipes

MATERIAL : PE100

SAFETY FACTOR : C=2.0

STANDARD : EN 1555-2

D (mm)	SDR 17		SDR 11	
	S (mm)	Weight (kg/m)	S (mm)	Weight (kg/m)
16	2.3	0.11	3	0.14
20	2.3	0.133	3	0.17
25	2.3	0.171	3	0.235
32	2.3	0.225	3	0.28
40	2.3	0.285	3.7	0.430
50	2.9	0.440	4.6	0.666
63	3.6	0.688	5.8	1.05
75	4.3	0.976	6.8	1.47
90	5.1	1.39	8.2	2.12
110	6.3	2.08	10.0	3.14
125	7.1	2.66	11.4	4.08
140	8.0	3.34	12.7	5.08
160	9.1	4.35	14.6	6.67

Larger diameters not regular, available on request

- Maximum wall thicknesses are in compliance with EN 1555-2
- Standard pipe length (export): 11,8 m or 12 m
- Diameters ≤ 32 & 63 mm available on coils of 100 m
- Other lengths available on request

GAS PIPES

MATERIAL : PE80

SAFETY FACTOR : C=2.0

STANDARD : EN 1555-2

D (mm)	SDR 11	
	S (mm)	Weight (kg/m)
16	-	-
20	2.3	0.120
25	2.3	0.150
32	2.9	0.272
40	3.7	0.430
50	4.6	0.666
63	5.8	1.05
75	6.8	1.47
90	8.2	2.12
110	10.0	3.14
125	11.4	4.08
140	12.7	5.08
160	14.6	6.67
180	16.4	8.42
200	18.2	10.4
225	20.5	13.1
250	22.7	16.2
280	25.4	20.3
315	28.6	25.6
355	32.2	32.5
400	36.3	41.3
450	40.9	52.3
500	45.4	64.5
560	50.8	80.8
630	57.2	102

Larger diameters not regular, available on request

- Maximum wall thicknesses are in compliance with EN 1555-2
- Standard pipe length (export): 11,8 m or 12 m
- Diameters ≤ 32 & 63 mm available on coils of 100 m
- Other lengths available on request

MEAN OUTSIDE DIAMETERS AND OUT-OF-ROUNDNESS

Nominal outside diameter d_n	$d_{em,min}$	$d_{em,max}$ Grade B	Maximum of absolute out-of-roundness (quality)	
			Grade K	Grade N
16	16,0	16,0	1,2	1,2
20	20,0	20,3	1,2	1,2
25	25,0	25,3	1,5	1,2
32	32,0	32,3	2,0	1,3
40	40,0	40,4	2,4	1,4
50	50,0	50,4	3,0	1,4
63	63,0	63,4	3,8	1,5
75	75,0	75,5	-	1,6
90	90,0	90,6	-	1,8
110	110,0	110,7	-	2,2
125	125,0	125,8	-	2,5
140	140,0	140,9	-	2,8
160	160,0	161,0	-	3,2
180	180,0	181,1	-	3,6
200	200,0	201,2	-	4,0
225	225,0	226,4	-	4,5
250	250,0	251,5	-	5,0
280	280,0	281,7	-	9,8
315	315,0	316,9	-	11,1
355	355,0	357,2	-	12,5
400	400,0	402,4	-	14,0
450	450,0	452,7	-	15,6
500	500,0	503,0	-	17,5
560	560,0	563,4	-	19,6
560	560,0	633,8	-	22,1

MINIMUM WALL THICKNESS (MM)

Nominal outside diameter d_n	Minimum wall thickness y,min						
	SDR 9	SDR 11[a]	SDR 13,6	SDR 17[a]	SDR 17,6[b]	SDR 21	SDR 26
16	3,0	2,3	-	-	-	-	-
20	3,0	2,3	-	-	-	-	-
25	3,0	2,3	2,0	-	-	-	-
32	3,6	3,0	2,4	2,0	2,0	-	-
40	4,5	3,7	3,0	2,4	2,3	2,0	-
50	5,6	4,6	3,7	3,0	2,9	2,4	2,0
63	7,1	5,8	4,7	3,8	3,6	3,0	2,5
75	8,4	6,8	5,6	4,5	4,3	3,6	2,9
90	10,1	8,2	6,7	5,4	5,2	4,3	3,5
110	12,3	10,0	8,1	6,6	6,3	5,3	4,2
125	14,0	11,4	9,2	7,4	7,1	6,0	4,8
140	15,7	12,7	10,3	8,3	8,0	6,7	5,4
160	17,9	14,6	11,8	9,5	9,1	7,7	6,2
180	20,1	16,4	13,3	10,7	10,3	8,6	6,9
200	22,4	18,2	14,7	11,9	11,4	9,6	7,7
225	25,2	20,5	16,6	13,4	12,8	10,8	8,6
250	27,9	22,7	18,4	14,8	14,2	11,9	9,6
280	31,3	25,4	20,6	16,6	15,9	13,4	10,7
315	35,2	28,6	23,2	18,7	17,9	15,0	12,1
355	39,7	32,2	26,1	21,1	20,2	16,9	13,6
400	44,7	36,4	29,4	23,7	22,8	19,1	15,3
450	50,3	40,9	33,1	26,7	25,6	21,5	17,2
500	55,8	45,5	36,8	29,7	28,4	23,9	19,1
560	-	50,9	41,2	33,2	31,9	26,7	21,4
630	-	57,3	46,3	37,4	35,8	30,0	24,1

a. Preferred series.

b. SDR 17,6 series might be removed at the next revision of this International Standard.

c. For practical reasons, electrofusion and butt fusion of pipe of 2,0 mm wall thickness is not recommended.

d. Minimum wall thickness values greater than limits of 2,3 mm, 2,4 mm and 2,9 mm may be imposed for practical reasons in accordance with national requirements. See manufacturer's technical files or national specifications for advice.

GAS STANDARDS

EN 549	SPECIFICATION FOR ELASTOMERIC MATERIALS USED IN THE MANUFACTURE OF SEALS
ISO 161-1:1996	THERMOPLASTIC PIPES - NOMINAL OUTSIDE DIAMETERS AND NOMINAL PRESSURES
ISO 4065:1996	THERMOPLASTIC PIPES - UNIVERSAL WALL THICKNESS TABLES
ISO 4437:1997	BURIED PE PIPES FOR THE SUPPLY OF GASEOUS FUELS
ISO 11922-1:1997	THERMOPLASTIC PIPES FOR THE CONVEYANCE OF FLUIDS. DIMENSIONS AND TOLERANCES. METRIC SERIES
6437-1984	POLYETHYLENE PIPES (TYPE 50) IN METRIC DIAMETERS FOR GENERAL PURPOSES
ISO 8085:2001	POLYETHYLENE FITTINGS FOR USE WITH PIPES FOR THE SUPPLY OF GASEOUS FUELS
PART 1	GENERAL POLYETHYLENE REQUIREMENTS
PART 2	SPIGOT FITTINGS FOR BUTT-FUSSION OR SOCKET FUSION USING HEATED TOOLS AND FOR USE WITH ELECTROFUSION FITTINGS
PART 3	ELECTROFUSION FITTINGS
EN 1555-1	PLASTIC PIPING SYSTEMS FOR SUPPLY OF GASEOUS FUELS -POLYETHYLENE
EN 1555-2	PLASTIC PIPING SYSTEMS FOR SUPPLY OF GASEOUS FUELS - PIPES
EN 1555-3	PLASTIC PIPING SYSTEMS FOR SUPPLY OF GASEOUS FUELS - FITTINGS
EN 1555-4	PLASTIC PIPING SYSTEMS FOR SUPPLY OF GASEOUS FUELS-VALVE

PROPERTIES AND METHOD OF TESTING OF MATERIALS AND THEIR COMPATIBILITY

Melt flow rate tester
ISO 1133

Density tester
ISO 1183

Carbon Black Dispersion Tester
ISO 18553

Carbon black content tester
ISO 6964

Internal hydrostatic pressure
ISO 1167

Universal testing machine
Tensile test (elongation at break strain at break)
ISO 6269-1/3

Accelerated weathering testing machine
(For non-black Pipe)
ISO 4892

Heat reversion tester
ISO 2505

Thermal Stability
ISO 11357

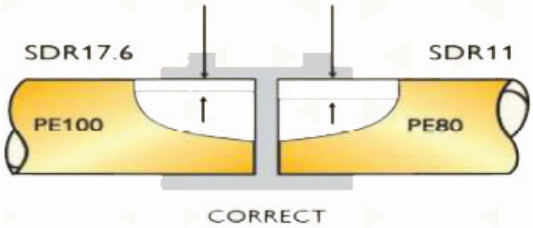

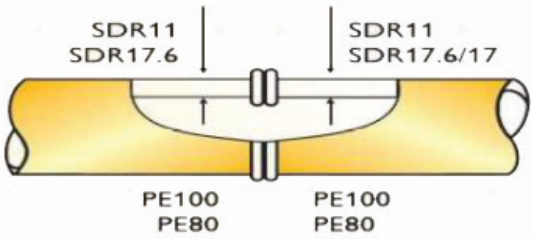

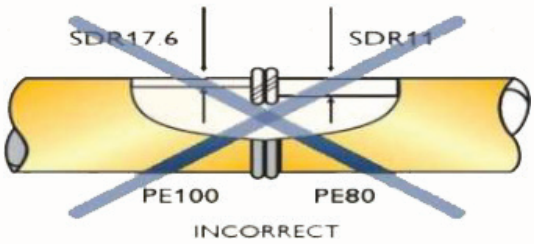

MATERIAL AND SDR COMPATIBILITY SUMMARY

Dissimilar materials and dissimilar wall thicknesses can be jointed by electrofusion.
NB. The maximum working pressure should not exceed the lower value for the two pipes

Similar materials and/or wall thicknesses may be jointed by butt-fusion or electrofusion.
NB. SDR17 may be butt-fused to SDR17, 6

Dissimilar wall thicknesses must not be jointed on-site using butt-fusion.
NB: PE80 should only be butt-fused to PE100 under closely controlled factory conditions.

JOINTING PE TO PE BY FUSION PE PIPES OF DIFFERENT SDRS

BUTT-WELDING

Butt-welding should only be used for jointing pipes of the same SDR value.

ELECTROFUSION

Electrofusion fittings are able to weld pipes having different wall thicknesses (SDRs). Care should be taken to ensure that the pressure rating is equal to or greater than that of the pipe. SDR applications are marked on individual fittings. However, for the more unusual SDRs, specific advice should be sought from our Technical Support Department.

JOINTING DIFFERENT TYPES OF PE

Similarly different grades of PE can be joined together in like fashion. Butt-welding different pipe materials - for example, PE80 to PE100 is not recommended on site.

وصلات لأنظمة المياه و الري

Compression and Irrigation Fittings

إرشادات التجميع والتركيب

تقطع الأنابيب بزاوية قائمة 90 درجة.

في البداية يتم إدخال صامولة الربط مع الأخذ في الاعتبار مسافة كافية للتركيب (التثبيت والبرشمة) ، مع تجنب دفعها كثيراً للأمام داخل الأنابيب ، والطوق (الجلبة) والجوانات ذات الشفاة.

تغذية ودفع البدن على طول محور الأنابيب.

يمكن ربط الصامولة باليد بسهولة بالنسبة للوازم وملحقات وقطع التركيب التي يصل قطرها إلى ٢٠ ملم حتى ٦٣ ملم. أما بداية من قطر ٧٥ ملم حتى ١١٠ ملم، في حين ينصح باستخدام مفتاح ربط لربط الملحقات ذات المقاسات الأكبر

Assembly Instructions

Cut the pipe at 90 degrees

Insert at first the locking nut then clinching ring, avoiding pushing it too much forward into the pipe, the collar and the lip gasket.

Feed and push the body along the pipe axis.

The nut can be easily locked by hand for fittings starting from 20MM up to 63MM, whereas bigger diameters are advised to use a wrench for locking it.

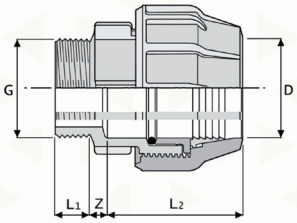

SAFMA

بداية خط سن خارجي
MALE ADAPTOR

Code	D x G	L2	Z	L1	Nominal Pressure (Bar)	Quantity per Carton (pcs)	Piece Weight (grams)
SAFMA032X1"	32 x 1"	67	6	20	10	160	100
SAFMA050X1-1/2"	50 x 1-1/2"	92	7	21	10	50	225
SAFMA063X2"	63 x 2"	109	8	26	10	30	385
SAFMA090X3"	90 x 3"	136	11	35	10	12	860
SAFMA110X4"	110 x 4"	146	12	39	10	8	1240

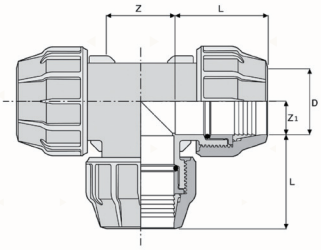

SAFTEE

قسام 90°
TEE 90°

Code	D x D1 x D	L	Z	Z1	Nominal Pressure (Bar)	Quantity per Carton (pcs)	Piece Weight (grams)
SAFTEE032	32 x 32 x 32	68	45	23	10	50	275
SAFTEE050	50 x 50 x 50	92	56	30	10	15	675
SAFTEE063	63 63 x 63	110	70	35	10	10	1145
SAFTEE090	90 x 90 x 90	136	98	45	10	4	2500
SAFTEE110	110 x 110 x 110	145	130	69	10	2	3610

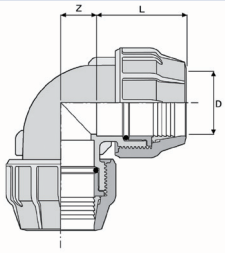

SAFELB

كوع 90°
ELBOW 90°

Code	D x D	D	L	I	Z	Nominal Pressure (Bar)	Quantity per Carton (pcs)	Piece Weight (grams)
SAFELB032	32 x 32	63	88	64	24	10	90	190
SAFELB050	50 x 50	92	120	91	29	10	25	480
SAFELB063	63 x 63	111	145	110	35	10	15	800
SAFELB090	90 x 90	152	188	135	53	10	6	1720
SAFELB110	110 x 110	174	210	145	65	10	4	2520

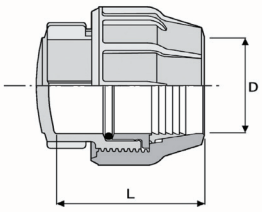

SAFEC

نهاية الخط
END CAP

Code	D	L	Nominal Pressure (Bar)	Quantity per Carton (pcs)	Piece Weight (grams)
SAFEC032	32	78	10	170	100
SAFEC050	50	95	10	55	215
SAFEC063	63	111	10	30	380
SAFEC090	90	141	10	12	830
SAFEC110	110	157	10	10	1200

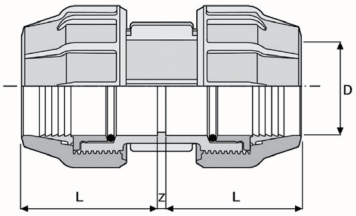

SAFCOU

وصلة خط
COUPLING

Code	D x D	D	L	Z	Nominal Pressure (Bar)	Quantity per Carton (pcs)	Piece Weight (grams)
SAFCOU032	32 X 32	32	68	3	10	100	172
SAFCOU050	50 X 50	50	92	4	10	40	390
SAFCOU063	63 X 63	63	110	5	10	18	670
SAFCOU090	90 X 90	90	135	6	10	6	1532
SAFCOU0110	110 X 110	110	145	6	10	6	2100

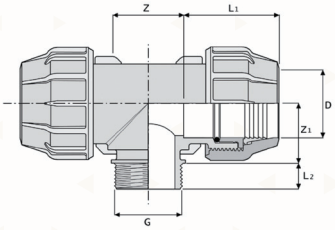

SAFCOU

قسام 90° (سن خارجي)
MALE TEE 90°

Code	D x G x D	L1	L2	Z	Z1	Nominal Pressure (Bar)	Quantity per Carton (pcs)	Piece Weight (grams)
SAFMTEE050X1-1/2"	50 x 1-1/2" x 50	92	24	56	52	10	20	516
SAFMTEE063X2"	63 x 2" x 63	109	30	72	59	10	10	900
SAFMTEE090X3	90 x 3" x 90	137	36	96	84	10	4	1930
SAFMTEE110X4	110 x 4" x 110	145	44	125	96	10	3	2890

SAFMELB

كوع 90° (سن خارجي)
MALE ELBOW 90°

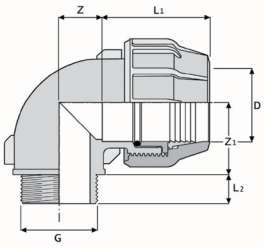

Code	D x G	L1	L2	Z	Z1	Nominal Pressure (Bar)	Quantity per Carton (pcs)	Piece Weight (grams)
SAFMELB032X1"	32 x 1"	67	23	23	32	10	130	115
SAFMELB050X1-1/2"	50 x 1-1/2"	90	25	30	52	10	40	315
SAFMELB063X2"	63 x 2"	109	31	37	59	10	20	525

1- Upper Part

Saddle upper part is made of a combination of Polypropylene Grade PP-570 and PP-440.

2- Base Part

Saddle base part is made of a combination of Polypropylene Grade PP-570 and PP 440

3- Bolt & Nuts

Bolt and nuts are made of stainless steel with plated Hex Bolts, full thread Din 933 - CI-4.8.
Stainless Steel Bolt & Nut (Optional) to be supplied on request.

4- 'O' Ring

'O' Rings are made of nitrile-butadiene rubber (NBR).

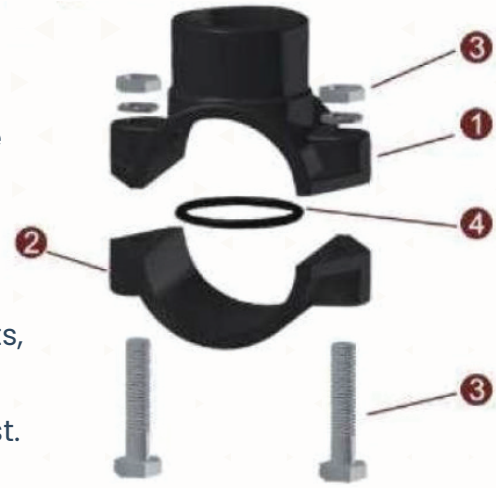

Saddle Assembly

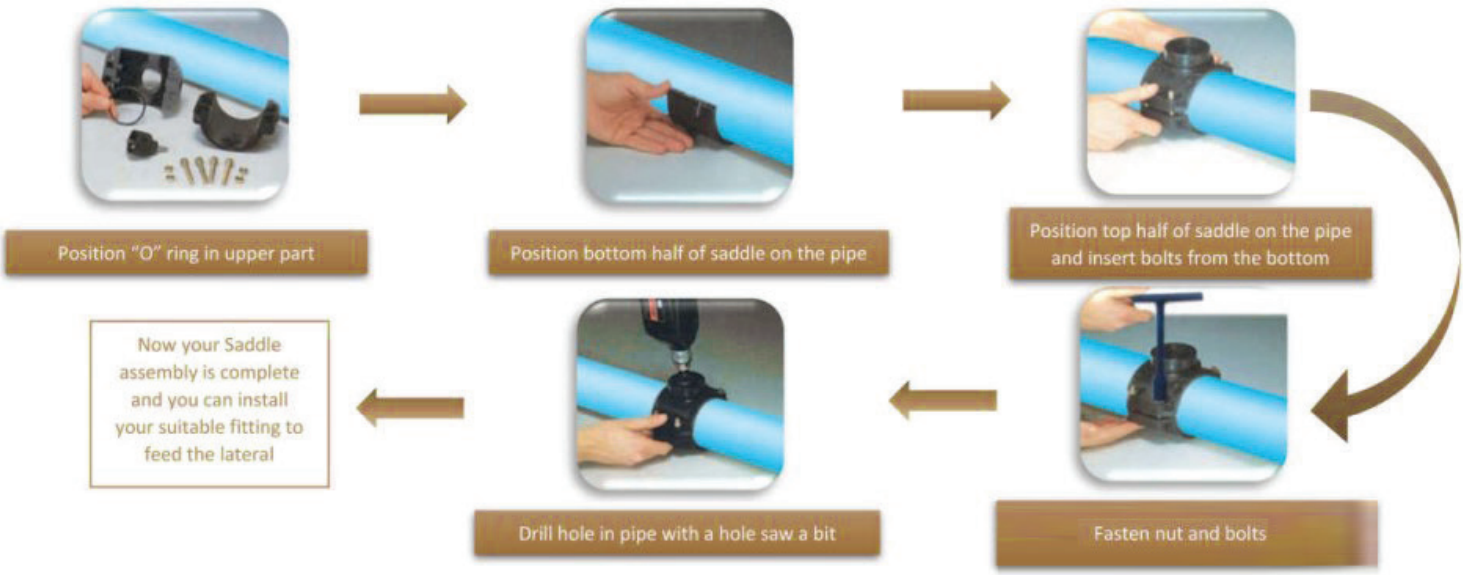

SAFSA

مربط
SADDLE

Nominal Diameter mm(d) X Inch(G)	Code	No. of Bolts	Nominal Pressure (Bar)	Quantity per Carton (pcs)	Piece Weight (grams)
32 mm X 1/2"	SAFSA032X1/2"	2	10	200	102
32 mm X 3/4"	SAFSA032X3/4"	2	10	200	104
40 mm X 1/2"	SAFSA040X1/2"	2	10	200	102
40 mm X 3/4"	SAFSA040X3/4"	2	10	200	104
40 mm X 1"	SAFSA040X1	2	10	200	108
50 mm X 1/2"	SAFSA050X1/2"	2	10	150	120
50 mm X 3/4"	SAFSA050X3/4"	2	10	150	125
50 mm X 1"	SAFSA050X1"	2	10	150	126
63 mm X 1/2"	SAFSA063X1/2"	4	10	80	216
63 mm X 3/4"	SAFSA063X3/4"	4	10	80	218
63 mm X 1"	SAFSA063X1"	4	10	80	220
63 mm X 1-1/4"	SAFSA063X1-1/4"	4	10	80	245
63 mm X 1-1/2"	SAFSA063-1X1/2"	4	10	80	234
75 mm X 1/2"	SAFSA075X1/2"	4	10	50	342
75 mm X 3/4"	SAFSA075X3/4"	4	10	50	346
75 mm X 1"	SAFSA075X1"	4	10	50	350
75 mm X 1-1/2"	SAFSA075X1-1/2"	4	10	50	352
90 mm X1/2"	SAFSA090X1/2"	4	10	40	336
90 mm X3/4"	SAFSA090X3/4"	4	10	40	332
90 mm X1"	SAFSA090X1"	4	10	40	340
90 mm X 1-1/4"	SAFSA090X1-1/4"	4	10	40	350
90 mm X1-1/ 2"	SAFSA090X1-1/2"	4	10	40	346
90 mm X 2"	SAFSA090X2"	4	10	40	350
110 mm X 3/4"	SAFSA110X3/4"	4	10	30	458
110 mm X 1"	SAFSA110X1"	4	10	30	464
110 mm X 1-1/4"	SAFSA110X1-1/4"	4	10	30	476
110 mm X 1-1/2"	SAFSA110X1-1/2"	4	10	30	470
110 mm X 2"	SAFSA110X2"	4	10	30	484

SAFIRFICOU

وصلة كبس لخراطيم الري
IRRIGATION FITTING COUPLING

Code	D × D	Quantity per Carton (pcs)	Piece Weight (grams)
SAFIRFICOU013	13 x 13	2500	5
SAFIRFICOU025	25 x 25	600	11
SAFIRFICOU032	32 x 32	500	20

SAFIRFIRCOU

وصلة مخفضة كبس لخراطيم الري
IRRIGATION FITTING R-COUPLING

Code	D × D	Quantity per Carton (pcs)	Piece Weight (grams)
SAFIRFIRCOU013x8	13 x 8	5000	2.5
SAFIRFIRCOU016x13	16 x 13	2500	5

SAFIRFITEE

قسام كبس لخراطيم الري
IRRIGATION FITTING TEE

Code	D x D1 x D	Quantity per Carton (pcs)	Piece Weight (grams)
SAFIRFITEE013	25 x 25 x 25	500	15
SAFIRFITEE032	32 x 32 x 32	300	26

SAFIRFIRTEE

قسام مخفض كبس لخراطيم الري
IRRIGATION FITTING R-TEE

Code	D x G x D	Quantity per Carton (pcs)	Weight (Grams)
SAFIRFIRTEE025x13	25 x 13 x 25	500	15
SAFIRFIRTEE025x16	25 x 16 x 25	500	16
SAFIRFIRTEE025x1/2"	25 x 1/2" x 25	500	17
SAFIRFIRTEE025x 3/4"	25 x 3/4" x 25	500	17
SAFIRFIRTEE032x13	32 x 13 x 32	400	25
SAFIRFIRTEE032x16	32 x 16 x 32	400	25
SAFIRFIRTEE032x1"	32 x 1" x 32	300	29

SAFVB

صندوق محبس
VALVE BOX

Code	D	Quantity per Carton (pcs)	Weight (Grams)
SAFVB0160	160	1	536
SAFVB0250	250	1	1200

المحابس

PVC-U VALVES

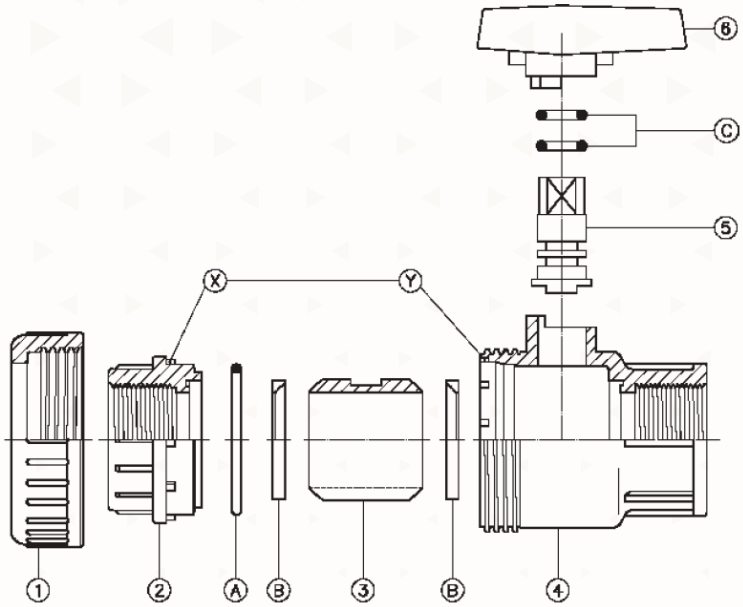

Pos	Components	n°	Material
1	Union nut	1	PVC
2	Support	1	PVC
3	Ball	1	PVC
4	Body	1	PVC
5	Stem	1	PVC
6	Handle	1	PVC
Pos	Components	n°	Material
A	O-ring Support	1	EPDM
B	Ball seal	2	PTFE+PE
C	O-ring Stem	2	EPDM

DISASSEMBLING AND REASSEMBLING IN CASE OF MAINTENANCE

Single union nut cannot be radially disassembled from the installation.

SAF does not recommend to take out the support (2) from its seat when making up the connc-tion. In any case if the valve is disassembled, be sure that the socket O-ring (A) does not come out of its groove and insert the teeth (X) of the support (2) in their correct seat (Y).

After taking out the support (2) it is possible to reach the internal parts of the valve in order to check the state of the O- ring and substitute them if necessary.

To reassemble the valve please act the other way taking care of replacing the O-ring correctly into their seats duly cleaned.

SAFBVTI

محبس لاكور (سن داخلي / خارجي)

MALE / FEMALE U-PVC THREADED ENDS SINGLE UNION BALL VALVE

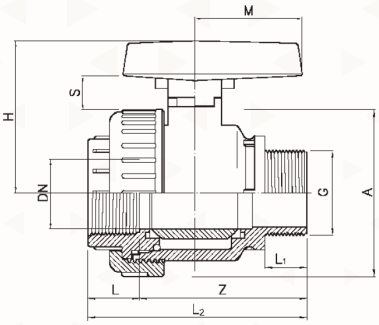

Code	G	L1	L	Z	L2	A	H	S	M	Nominal Pressure (Bar)	Quantity per Carton (pcs)	Piece Weight (grams)
SAFBVT1032X1"	1"	19	22	79	90	68	63	16	45	16	50	200
SAFBVT1050X1-1/2"	1-1/2"	21	23	109	122	94	88	21	57	16	20	470
SAFBVT1063X2"	2"	26	27	131	148	115	103	23	66	16	12	800

SAFBVT2

محبس لاكور (سن داخلي / داخلي)

FEMALE / FEMALE U-PVC THREADED ENDS SINGLE UNION BALL VALVE

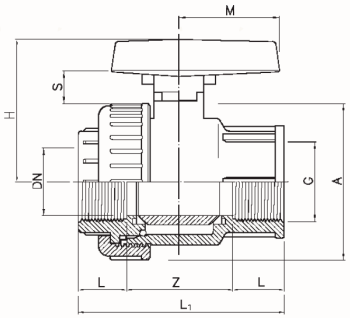

Code	G	L	Z	L1	A	H	S	M	Nominal Pressure (Bar)	Quantity per Carton (pcs)	Piece Weight (grams)
SAFBVT2090X3"	3"	34	122	190	168	139	26	84	10	6	2.28
SAFBVT2110X4"	4"	45	139	229	210	169	28	96	10	4	4.22

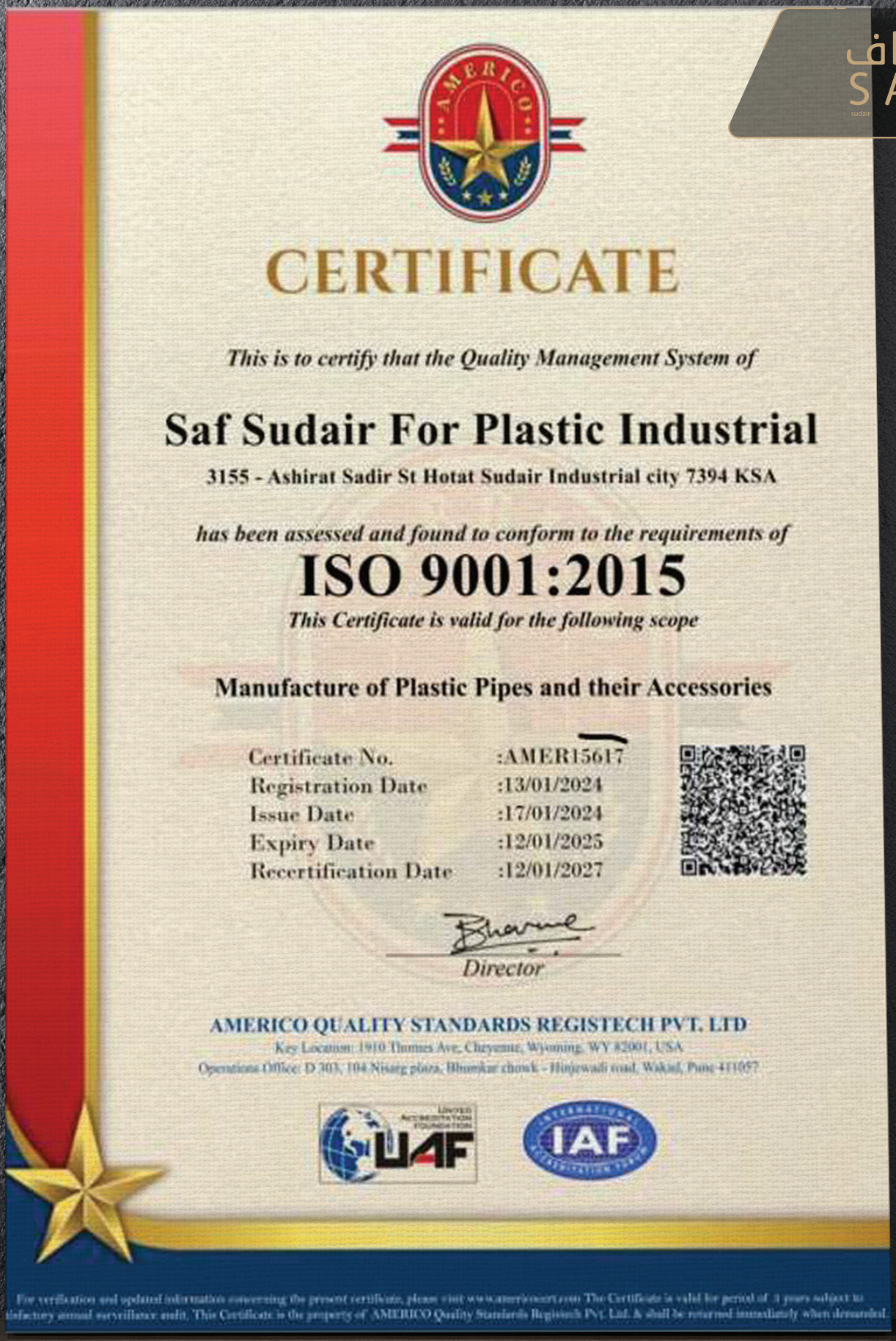

CERTIFICATE

This is to certify that the Quality Management System of

Saf Sudair For Plastic Industrial

3155 - Ashirat Sadir St Hotat Sudair Industrial city 7394 KSA

has been assessed and found to conform to the requirements of

ISO 9001:2015

This Certificate is valid for the following scope

Manufacture of Plastic Pipes and their Accessories

Certificate No.	:AMER15617
Registration Date	:13/01/2024
Issue Date	:17/01/2024
Expiry Date	:12/01/2025
Recertification Date	:12/01/2027

Director

AMERICO QUALITY STANDARDS REGISTECH PVT. LTD

Key Location: 1910 Thomes Ave, Cheyenne, Wyoming, WY 82001, USA

Operations Office: D 303, 104 Nisarg plaza, Bhumkar chowk - Hinjewadi road, Wakad, Pune 411057

For verification and updated information concerning the present certificate, please visit www.americocert.com The Certificate is valid for period of 3 years subject to satisfactory annual surveillance audit. This Certificate is the property of AMERICO Quality Standards Registech Pvt. Ltd. & shall be returned immediately when demanded.

صاف
SAF
sudair
سدير

الجودة في كل صنعة

المصنع / مدينة سدير للمال والأعمال

المبيعات : +966506103430 - +966506407208

info@safsudair.com www.safsudair.com